Altech Corp.®
by BERNSTEIN

SLC
Guard locking safety switch

The new generation of safe mechanical guard locking switches

Exactly the right solution.

Due to inertia some machines may continue to run after their power is disconnected. This can create a situation where it is possible to access the hazardous areas of the machine when they are still in a dangerous state. The most common approach to avoiding these hazards is to simply lock the guard or gate closed, allowing the machine enough time to safely wind down. This can be easily accomplished using our SLC solenoid locking keyed interlock switches. These switches use a solenoid mechanism to lock a door mounted activation key into the switch, preventing the guard, gate or door from being opened. Typically, the power to the locking solenoid is controlled using a zero speed device to sense that all the dangerous motion has stopped or a PLC or timer to insure that enough time is provided for the machine to come to a complete stop.

Did you know that …

… an interlocking device with guard locking combines two safety functions in one product?

1. Safe monitoring of the door position
2. Safe monitoring of the guard lock

Altech Corp.® • 35 Royal Road • Flemington, NJ 08822-6000 • P 908.806-9400 • F 908.806.9490 • www.altechcorp.com

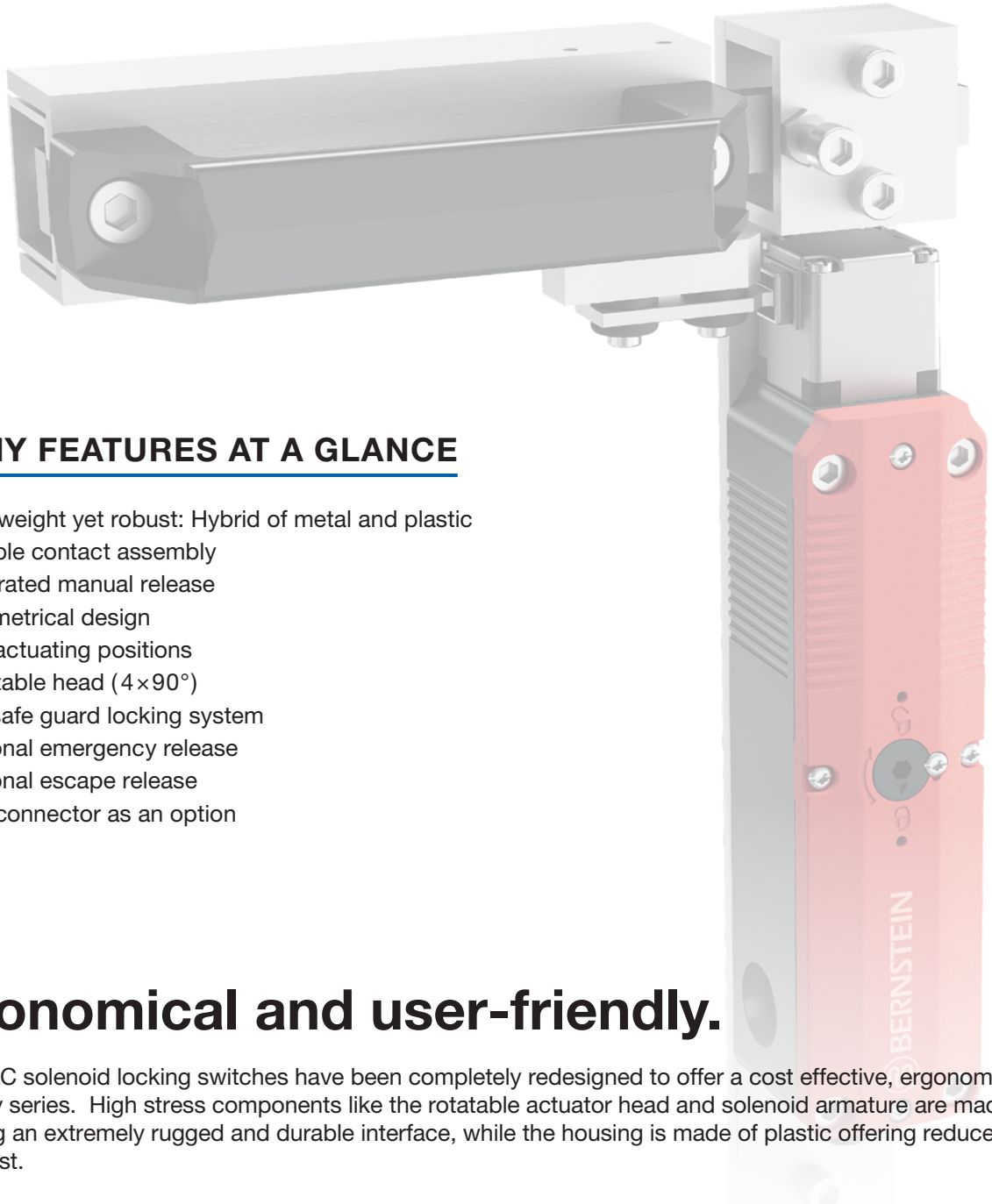

MANY FEATURES AT A GLANCE

- Lightweight yet robust: Hybrid of metal and plastic
- Flexible contact assembly
- Integrated manual release
- Symmetrical design
- Five actuating positions
- Rotatable head (4×90°)
- Fail-safe guard locking system
- Optional emergency release
- Optional escape release
- M12 connector as an option

Economical and user-friendly.

Our SLC solenoid locking switches have been completely redesigned to offer a cost effective, ergonomic and user friendly series. High stress components like the rotatable actuator head and solenoid armature are made of metal offering an extremely rugged and durable interface, while the housing is made of plastic offering reduced weight and cost.

Solenoid switches are available with either “Spring Locked”; where the keys are locked into the switches automatically and the solenoid must be powered to remove them or “Magnet Locked”; which requires power to the solenoid to lock the keys into the switch.

The SLC switches are available with up to four Normally Open or Normally Closed contacts. Failsafe Interlocking contacts, which only close when the key is inserted and locked are offered on most versions.

Emergency and escape release options, which allow you to override the locking mechanism, are also available.

The SLC
The modular concept

Altech Corp.® by BERNSTEIN

Actuator straight (ACS-1)
Proven standard model among the actuators.

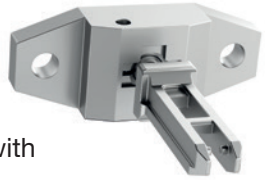

Actuator ACR-1
Radius actuator for use with small actuating radii.

Actuator flex (ACF-1)
Designed to compensate for a slight vertical/horizontal offset.

Actuator cross (ACC-1)
for vertical/horizontal mounting.

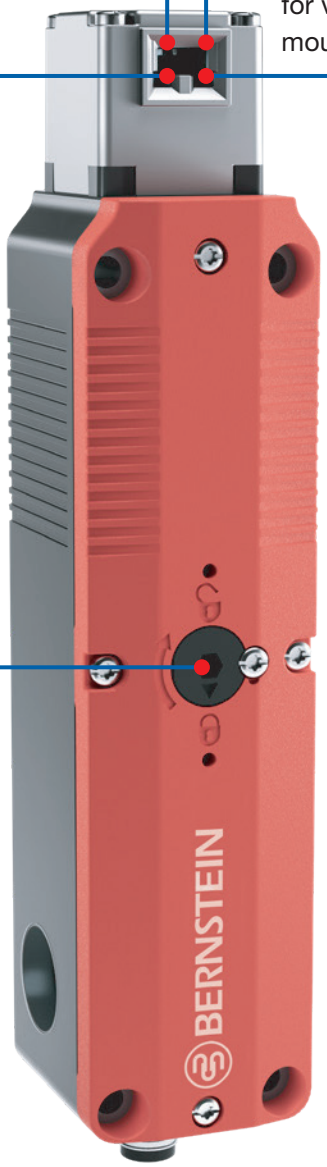

Manual release (standard)
Possibility of manually unlocking the switch using a tool – for example for maintenance work.

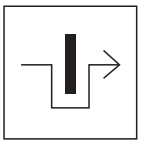

New symbol according to ISO 14119 for the interlocking contact

Contacts labelled with this symbol monitor the guard locking position. Since the SLC is a fail-safe guard locking switch, it is sufficient to integrate only these into the safety circuit.

Altech Corp.® • 35 Royal Road • Flemington, NJ 08822-6000 • P 908.806-9400 • F 908.806.9490 • www.altechcorp.com

In addition to the manual release, the SLC offers further functions that enable quick intervention if required.

Emergency release
As a ready-to-use switch or as an aeces sory, mounted on the front of the SLC, enables immediate opening from out-side the dangerous area.

Escape release
Optionally mounted on the rear of the SLC, the escape release enables immediate opening from within the dangerous area.

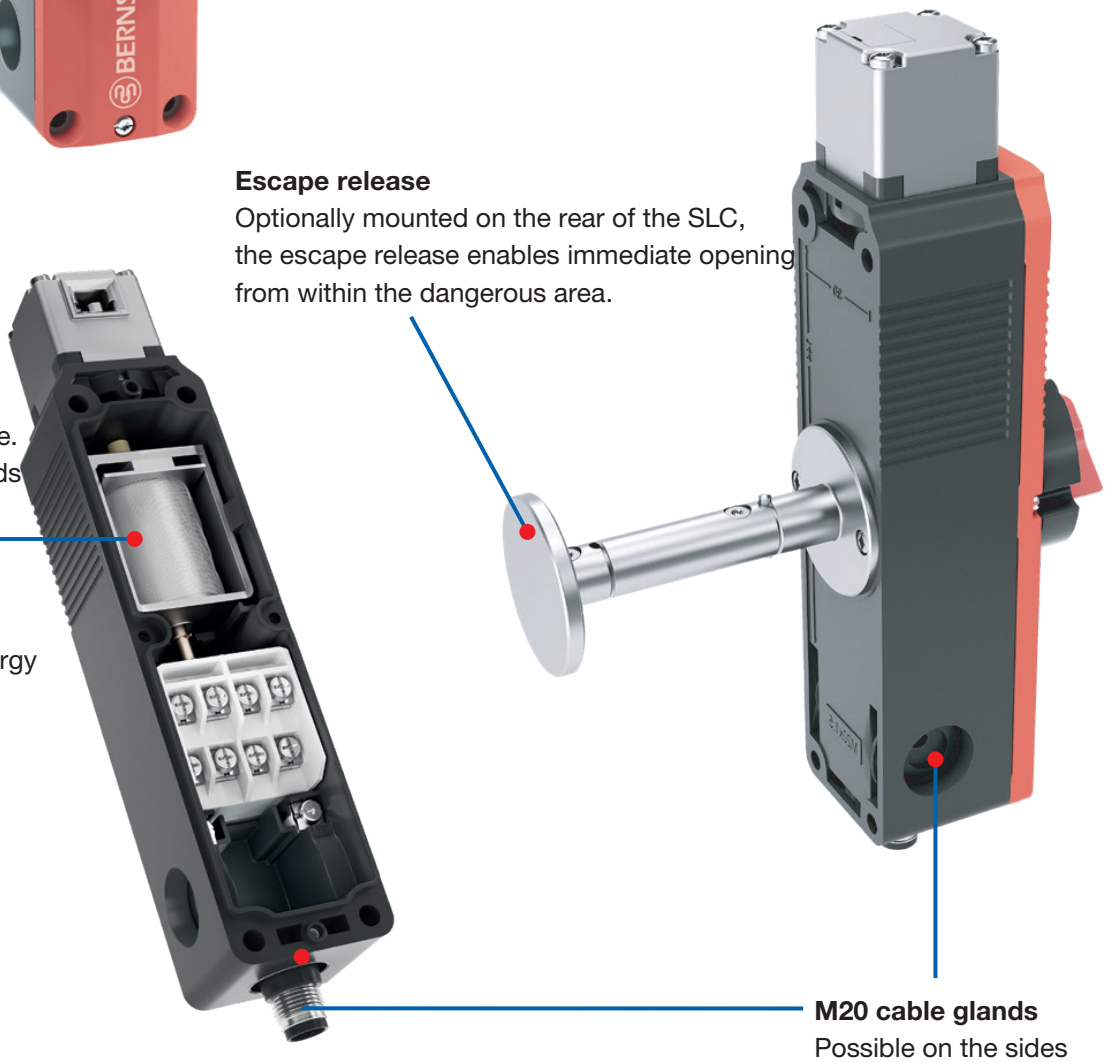

Guard locking principles

Spring-To-Lock
Guard locked by spring force. To unlock, the solenoid needs to be energised.

Power-To-Lock
Guard locked by energised solenoid. To unlock, the energy needs to be switched off.

M20 cable glands
Possible on the sides and from below.
Optionally available with M12 connector.

DGUV
Deutsche Gesetzliche Unfallversicherung
In pending

C US

Product Range
SLC and Actuator

Product range

Article number	Designation	Guard locking principle	Supply voltage of solenoid	Contact configuration		Emergency release	Connection type*
				Interlock	Guard locking		
6018200001	SLC-F-024-11/11-R4	Spring	24 V AC/DC	1 NC / 1 NO	1 NC / 1 NO	No	Standard
6018200007	SLC-F-024-20/20-R4	Spring	24 V AC/DC	2 NC	2 NC	No	Standard
6018200008	SLC-F-024-11/20-R4	Spring	24 V AC/DC	1 NC / 1 NO	2 NC	No	Standard
6018200009	SLC-F-024-20/11-R4	Spring	24 V AC/DC	2 NC	1 NC / 1 NO	No	Standard
6018200010	SLC-F-024-10/21-R4	Spring	24 V AC/DC	1 NC	2 NC / 1 NO	No	Standard
6018200011	SLC-F-024-10/30-R4	Spring	24 V AC/DC	1 NC	3 NC	No	Standard
6018200012	SLC-F-024-30/10-R4	Spring	24 V AC/DC	3 NC	1 NC	No	Standard
6018200013	SLC-F-024-11/11-R6	Spring	24 V AC/DC	1 NC / 1 NO	1 NC / 1 NO	Yes	Standard
6018200014	SLC-F-024-20/20-R6	Spring	24 V AC/DC	2 NC	2 NC	Yes	Standard
6018200018	SLC-F-024-10/20-R4-03	Spring	24 V AC/DC	1 NC	2 NC	No	M12, 8-pin
6018200019	SLC-F-024-10/11-R4-03	Spring	24 V AC/DC	1 NC	1 NC / 1 NO	No	M12, 8-pin
6018200020	SLC-F-024-11/10-R4-03	Spring	24 V AC/DC	1 NC / 1 NO	1 NC	No	M12, 8-pin
6018200021	SLC-F-024-10/11-R6-03	Spring	24 V AC/DC	1 NC	1 NC / 1 NO	Yes	M12, 8-pin
6018200022	SLC-F-024-10/20-R4-13	Spring	24 V AC/DC	1 NC	2 NC	No	M12, 8-pin
6018200002	SLC-M-024-11/11-R4	Magnet	24 V AC/DC	1 NC / 1 NO	1 NC / 1 NO	No	Standard
6018200015	SLC-M-024-20/11-R4	Magnet	24 V AC/DC	2 NC	1 NC / 1 NO	No	Standard
6018200016	SLC-M-024-11/20-R4	Magnet	24 V AC/DC	1 NC / 1 NO	2 NC	No	Standard
6018200017	SLC-M-024-20/20-R4	Magnet	24 V AC/DC	2 NC	2 NC	No	Standard
6018200003	SLC-F-120-11/11-R4	Spring	120 V AC	1 NC / 1 NO	1 NC / 1 NO	No	Standard
6018200005	SLC-F-230-11/11-R4	Spring	230 V AC	1 NC / 1 NO	1 NC / 1 NO	No	Standard
6018200004	SLC-M-120-11/11-R4	Magnet	120 V AC	1 NC / 1 NO	1 NC / 1 NO	No	Standard
6018200006	SLC-M-230-11/11-R4	Magnet	230 V AC	1 NC / 1 NO	1 NC / 1 NO	No	Standard

* 3 × M20 thread with closed housing wall

Altech Corp.® • 35 Royal Road • Flemington, NJ 08822-6000 • P 908.806-9400 • F 908.806.9490 • www.altechcorp.com

Actuators

Product selection

Article number	Designation
3911742390	ACS-1

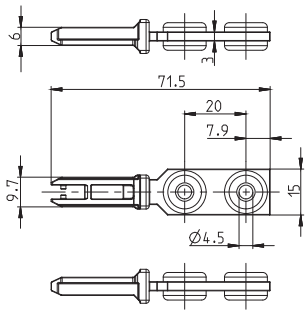

Mechanical data	
Actuator	Stainless steel (Niro)
Minimum actuating radius R_{min}	800mm

Product selection

Article number	Designation
3911742391	ACF-1

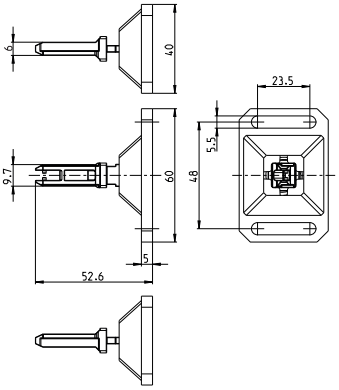

Mechanical data	
Actuator	Stainless steel (Niro)
Enclosure	GD-Zn
Minimum actuating radius R_{min}	400mm

The actuator can be aligned with the aperture of the SLC head opening by pressing it in and turning it 90°.

Product selection

Article number	Designation
3911742392	ACC-1

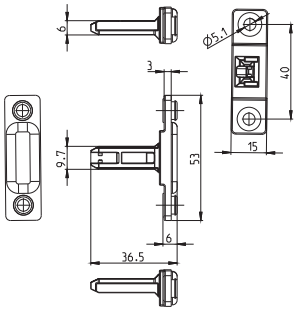

Mechanical data	
Actuator	Stainless steel (Niro)
Minimum actuating radius R_{min}	600mm

Product selection

Article number	Designation
3911742398	ACR-1

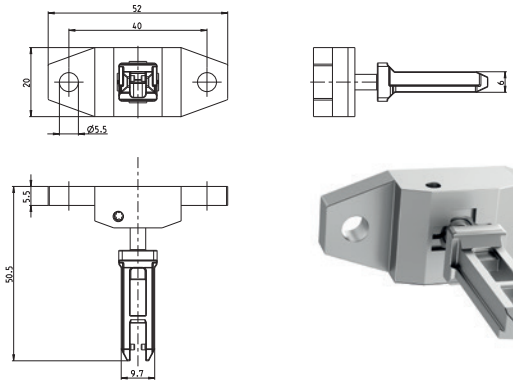

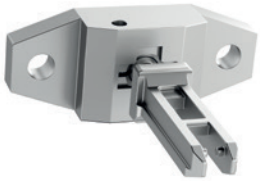

Mechanical data	
Actuator	Stainless steel (Niro)
Minimum actuating radius R_{min}	150 mm

Actuators must be ordered separately.

Accessories
for immediate release in case of emergency

Altech Corp.® by BERNSTEIN

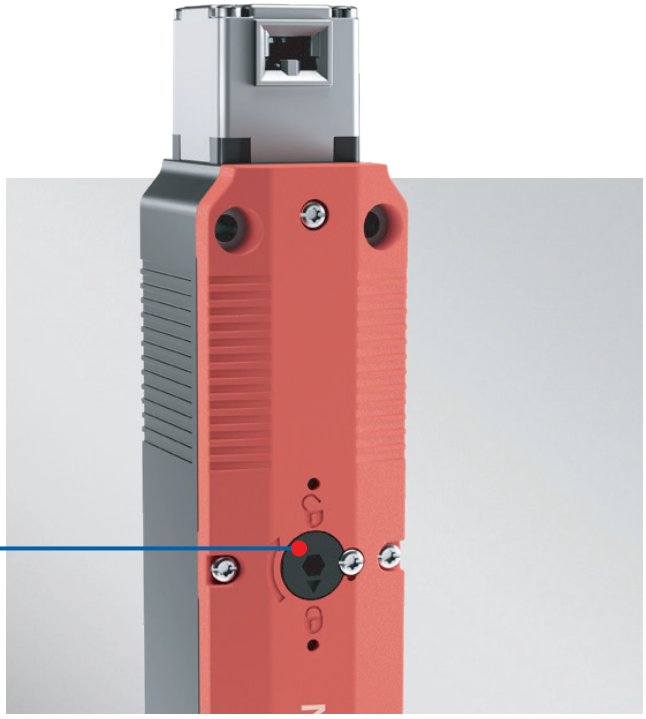

Emergency release
for immediate opening
from outside the dangerous area in case of an emergency.

Article number	Designation	Description
6051101003	EMR-F-1	Emergency release front
6051101004	EMR-B-1	Emergency release back
6051201005	ESCR-B-1	Basic set for escape release
6051201007	ESCR-20-1	Extension module escape release * Length: 20 mm
6051201006	ESCR-40-1	Extension module escape release * Length: 40 mm

Escape release
enables immediate opening **from inside the dangerous area** in case of an emergency.

Escape release
Basic set
ESCR-B-1

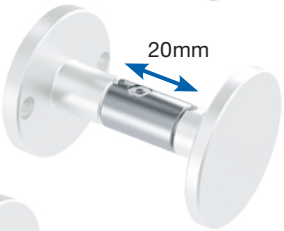

Extension module * 20 mm
ESCR-20-1

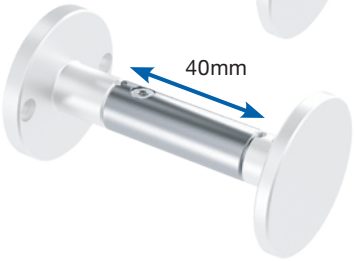

Extension module * 40 mm
ESCR-40-1

Altech Corp.® • 35 Royal Road • Flemington, NJ 08822-6000 • P 908.806-9400 • F 908.806.9490 • www.altechcorp.com

SLC Sliding Handle
for robust applications

The handle for the SLC combines various functions:

- Ergonomic handle to open the door
- Prevents lateral forces onto the switch head
- Prevents using the switch head as an end stop
- Guarantees optimum actuator insertion

These properties simplify fault exclusion and enable PL d to be achieved in the door monitoring and locking function.

The variant with escape release (BF1-SLC ES) includes an additional handle to be able to open the door from within the danger area when using the function. This requires at least the basic set (ESCR-B).

Article number	Designation	Description
6050101002	BF1-SLC	Door bolt for SLC
6051201008	BF1-SLC ES	Door bolt for SLC with escape release The required basic set (ESCR-B-2 6051201009) is enclosed with the bolt.

Technical data
SLC safety switch

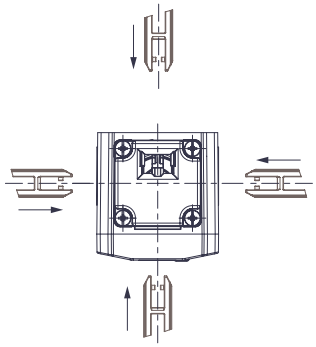

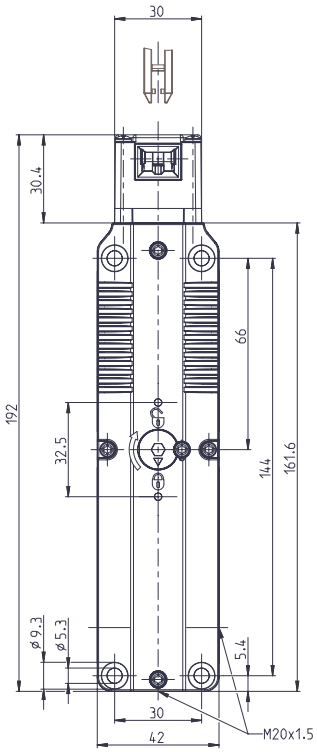

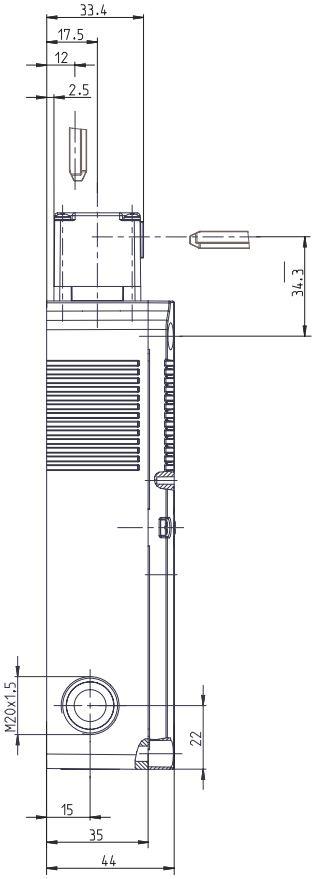

Electrical data

- **Contacts**
  Rated operational voltage U_e: 240 V AC / 24V DC
  Utilization category:
  AC-15, Ue / Ie 240 V / 1,5 A (B300)
  DC-13, Ue / Ie 24 V / 1,5 A; 250 V / 0,11 A (R300)

- **Solenoid**
  Operating voltage: 24 V AC / DC or 120 V AC
  or 230 V AC

Mechanical data

- Enclosure: Thermoplastic, glass fibre reinforced (UL 94-V0)
- Cover: Thermoplastic, glass fibre reinforced (UL 94-V0)
- Operating device: Metal
- Latching force: 1500 N (EN ISO 14119)
- Ambient temperature: -25 °C to +55 °C
- Switching principle: 4 slow-action-contacts
- Protection class: IP67

Safety data

- B_{10D}: 2×10^6 cycles (EN ISO 13849-1)

Altech Corp.® • 35 Royal Road • Flemington, NJ 08822-6000 • P 908.806-9400 • F 908.806.9490 • www.altechcorp.com

Altech Corp.® by BERNSTEIN

Safety Switches & Suspension Systems

Keyed Safety Switches

- Monitors the position of hard guarding doors, gates & panels
- Plastic and metal switch bodies in a variety of sizes
- Many different actuation keys available
- Normally Closed and/or Normally Open Contacts
- Switching capacity 240 Volts; 10 AMPS
- B10d up to 2 million cycles
- Protection Rating IP65

NEW

New RFID Non Contact Safety Switches

- Safety Rating Cat. 4, PLe, SIL CL3; standalone or in series
- Plug and play M12 connector installation
- PNP or DCD diagnostics
- Common, High or Unique Coding
- 13mm sensing distance
- Local reset available
- Protection Rating IP69

Safety Limit Switches

- Huge range of housing & actuation types
- Switch bodies in plastic or metal
- Normally Closed Positively Opening Contacts
- B10d up to 20 million cycles
- Switching Capacity 240 Volts; 10 AMPS
- Protection Rating IP65

Safety Rope Pull Switches

- Plastic and Metal switch bodies
- Quick Fix safety rope mounting system
- Built in reset /emergency stop button
- Clearly visible rope tension indication
- Switching Capacity 240 Volts; 10 AMPS
- Protection Rating IP67

Solenoid Locking Safety Switches

- For locking hard guarding doors, gates & panels
- Plastic and metal switch bodies in two different sizes
- Many different actuation keys available
- Normally Closed and/or Normally Open Contacts
- Switching capacity 240 Volts; 10 AMPS
- B10d up to 2 million cycles
- Protection Rating IP65

Hinged Door Safety Switches

- Monitors the position of hard guarding doors, gates & panels
- Easy to install and tamper proof
- No alignment or re-alignment necessary
- Actuator free with no mechanical deterioration
- Reliable operation - B10d up to 2 million cycles
- Up to 4NC/2NO contacts per switch
- Protection Rating IP67

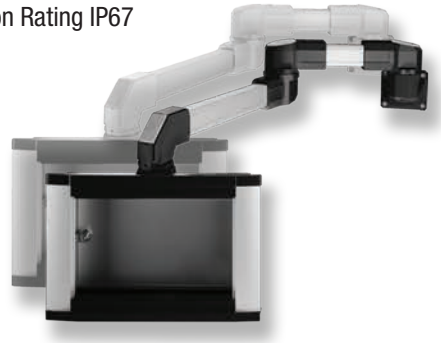

Suspension Systems

- Modular Design
- Aluminum and Steel Constructions
- Light Duty (up to 99 lbs.)
- Medium Duty (up to 275 lbs.)
- Heavy Duty (up to 330 lbs)
- Special Stainless Steel Tubing

Altech's Large Line of Control Components

Altech Corp.®

Your Source for Automation & Control Components

Busbars & Power Distribution • Circuit Protection
• Contactors & Overload Relays • DC-UPS • Digital Panel Meters
• Digital Timers • DIN Enclosures • Eurostrips • European Fuses
• Ferrules • Foot Switches • Fuse Holders
• Ground Fault Protection • Industrial Enclosures • Interface Modules
• Limit Switches • Liquid Tight Strain Reliefs • Marking & Engraving Systems
• Motor Disconnect Switches • Pin & Sleeve Devices • Power Supplies
• Push Buttons & Pilot Lights • Rope Pull Switches
• Safety & Slimline Relays • Safety Switches • Solid State Relays
• Sensors • Programmable Relays • Terminal Blocks
• Test & Measurement • Tower Lights • Wire Ducts

Altech Corp.® 595-2000
Printed January 2020

Altech Corp.® • 35 Royal Road • Flemington, NJ 08822-6000 • P 908.806-9400 • F 908.806.9490 • www.altechcorp.com