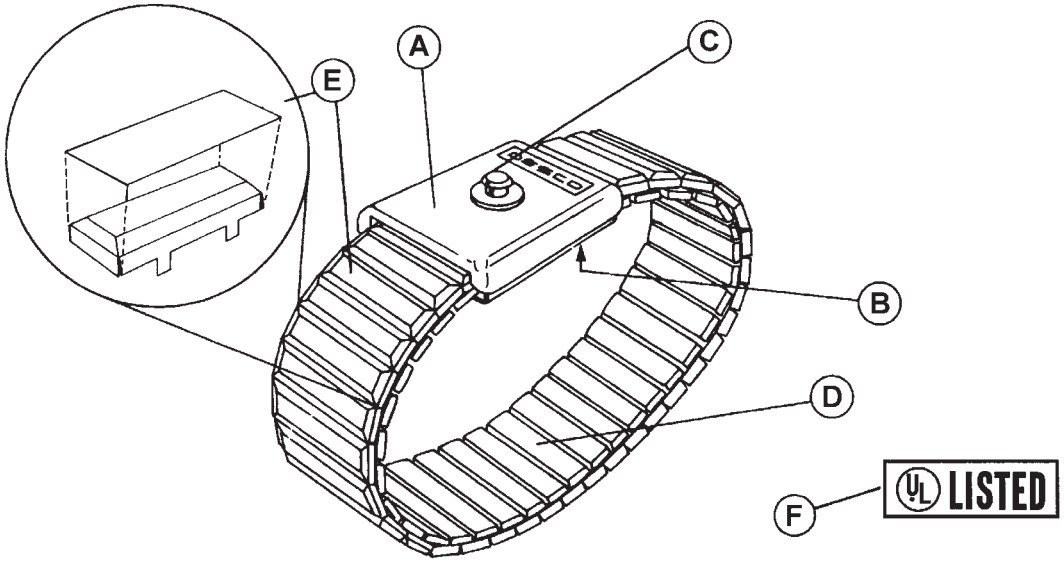

A. Black ABS plastic cap. Molded with DESCO's name and part number.

B. 300 series stainless steel backplate (0.015" thick). Manufacturing date code is stamped into stainless steel back plate.

ITEM	Description	CIRCUMFERENCE Min	Max	Width	Links Inside	Links Outside
09043	Band Only, Large	7.25"	13"	.630"	40	41
09044	Band Only, Medium	6.5"	12"	.630"	36	37
09045	Band Only, Small	5.5"	10"	.630"	30	31
09086	Band w/6' Coil Cord, Large	7.25"	13"	.630"	40	41
09087	Band w/6' Coil Cord, Medium	6.5"	12"	.630"	36	37
09088	Band w/6' Coil Cord, Small	5.5"	10"	.630"	30	31

C. 4mm snap stud machined from 300 series stainless steel. Fits to 4mm spring loaded medical type socket. Coil cord disengages from snap with 1-5 lbs. of perpendicular force. Durable, providing long life well beyond that of sheet metal snaps.

D. Premium metal expansion wrist strap. Inside links are constructed of 300 Series Stainless Steel. Width of links is 0.630".

E. .002" polyvinylfluoride sheet is laminated to each link before assembly. Provides 5,000 volt RMS insulation per ASTM D149-81. Will not flake or peel.

F. Underwriters' Laboratory listed 90P1C.

Meets or exceeds requirements of EOS/ESD-S1-1987.

Made in America

WRISTBAND, METAL EXPANSION, FIXED SIZE, STATIC CONTROL

DESCO

DESCO WEST: 3651 WALNUT AVE., CHINO, CA 91710 WEB SITE: www.desco.com
PHONE (909) 627-8178 FAX (909) 627-7449
DESCO EAST: 90 HUDSON RD, CANTON, MA 02021-1407
PHONE (781) 821-8370 FAX (781) 575-0172

DRAWING NUMBER 09043

DATE: 02/04

© 2004 DESCO INDUSTRIES INC.
Employee Owned